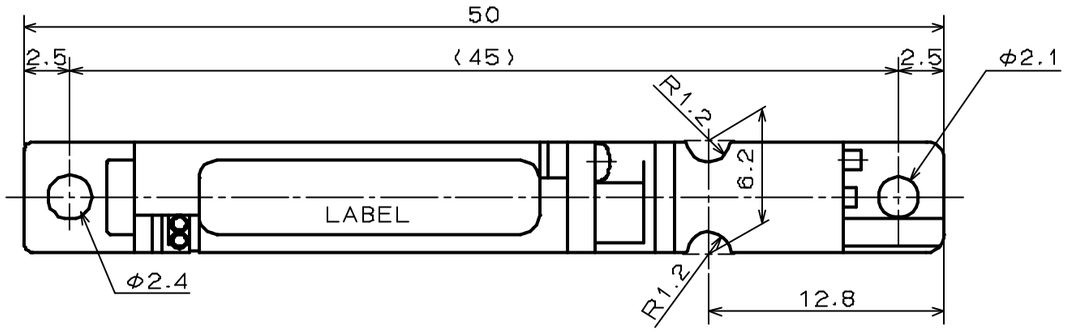

CLEAN VALVE

SPECIFICATIONS for MODEL KV-2-NCG

ORIFICE DIAMETER	: 0.8mm	
OPERATING PRESSURE RANGE	: IN	0 ~ 100kPa {0 ~ 1.0bar}
	OUT	0 ~ 50kPa {0 ~ 0.5bar}
FLUID MEDIA	: FLUIDS CHEMICALLY COMPATIBLE WITH MATERIALS BELOW	
MEDIA TEMPERATURE RANGE	: 5 ~ 50℃	
AMBIENT TEMPERATURE RANGE	: 5 ~ 40℃	
RATED VOLTAGE	: 12VDC, 24VDC	
POWER CONSUMPTION	: 1.8W	
DUTY CYCLE	: CONTINUOUS	
COIL TEMPERATURE INCREASE	: MAX. 90℃ FROM ROOM TEMPERATURE	
INSULATION CLASS	: CLASS B	
DIELECTRIC STRENGTH	: 1000VAC FOR 60s	

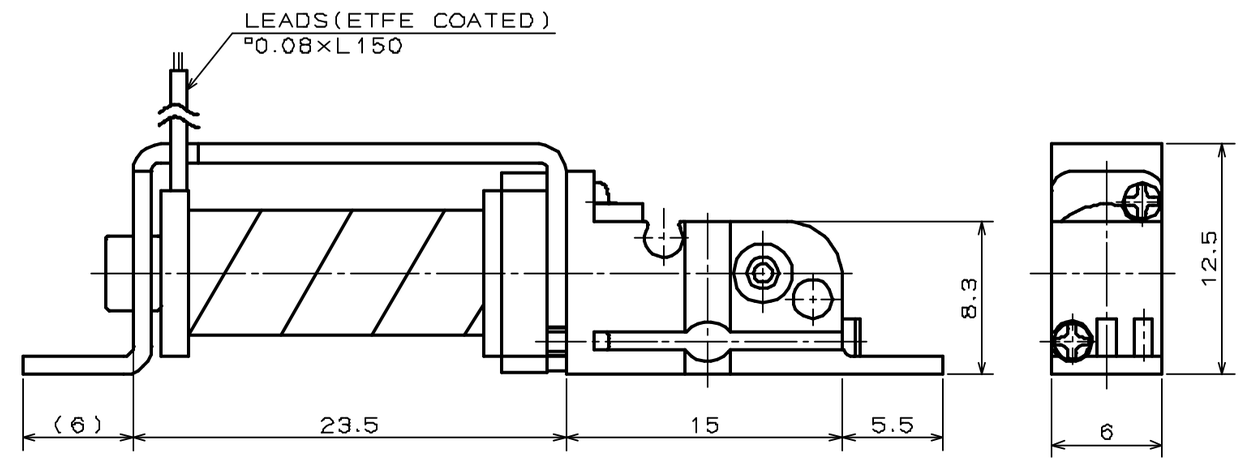

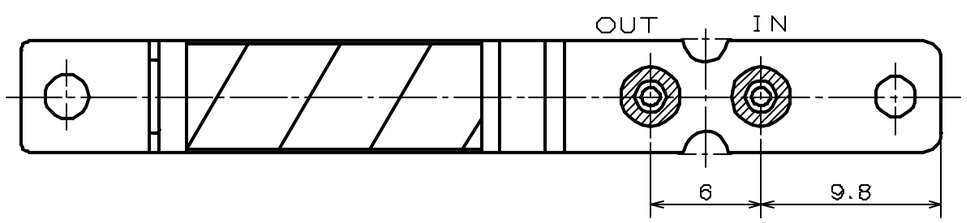

WETTED MATERIALS

SYM.	DATE	DESCRIPTION	PART NO	PART NAME	MATERIAL	REQD.	NOTE
△							
△			3	O-RING	DAIEL®PERFLUOR	2	
△			2	VALVE BODY	PEEK	1	
			1	DIAPHRAGM	DAIEL®PERFLUOR	1	

REVISION

SCALE	APPROVED	CHECKED	DRAWN		
3/1 A3				CLEAN VALVE KV-2-NCG	DRAWING NO 987061-00-S

TAKASAGO ELECTRIC INC MIDORIKU, NAGOYA, JAPAN

2004-11-01