FOR REFERENCE ONLY

SOLENOID VALVE

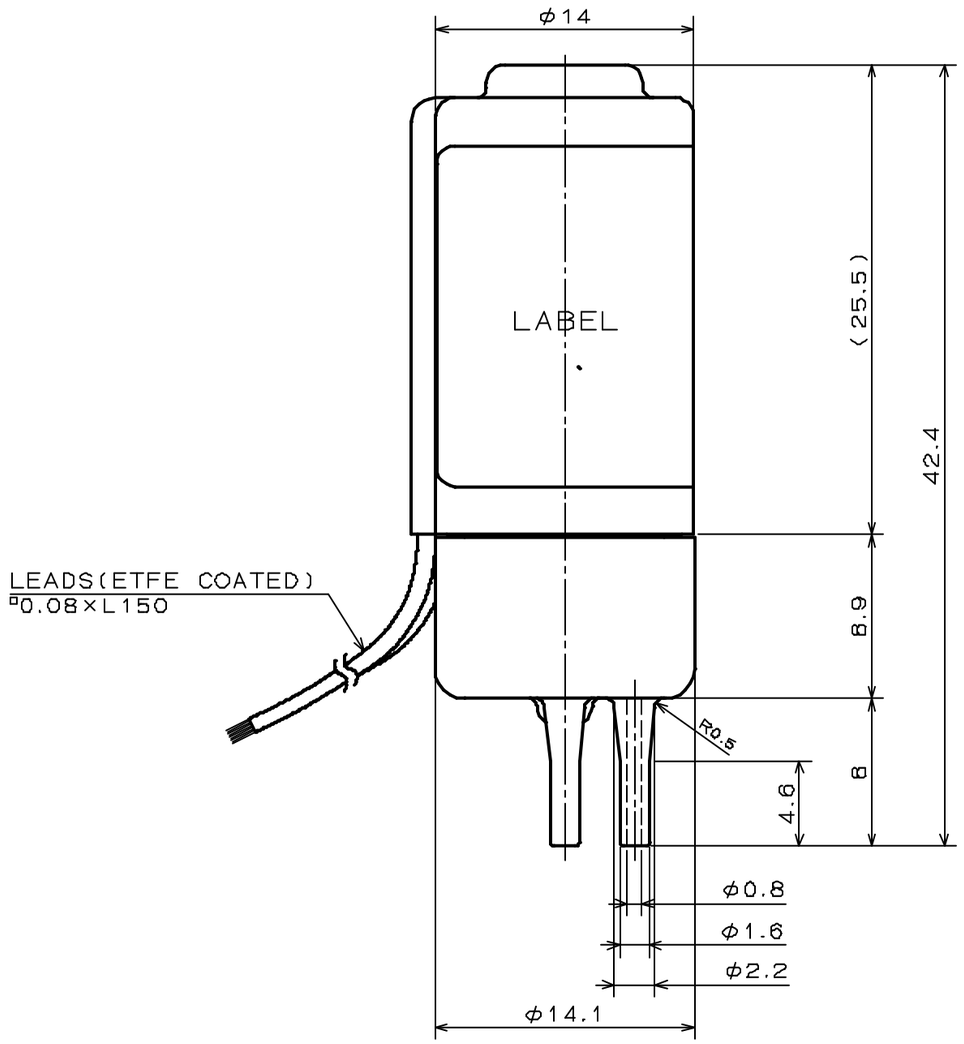

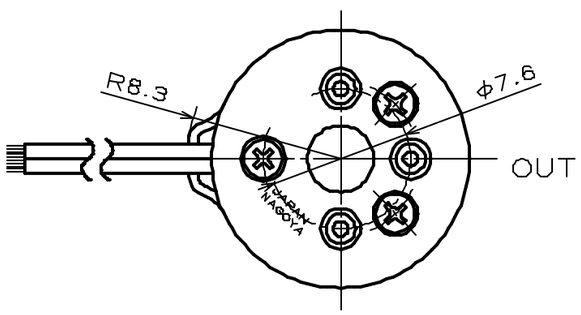

SPECIFICATIONS for MODEL EXAKN-2-NC

ORIFICE DIAMETER	:	0.8mm
OPERATING PRESSURE RANGE	:	IN -40 ~ 300kPa [-300mmHg ~ 3bar]
		OUT 0 ~ 150kPa [0 ~ 1.5bar]
FLUID MEDIA	:	FLUIDS CHEMICALLY COMPATIBLE WITH MATERIALS BELOW
MEDIA TEMPERATURE RANGE	:	0 ~ 60℃
AMBIENT TEMPERATURE RANGE	:	0 ~ 60℃
RATED VOLTAGE	:	12VDC、24VDC
POWER CONSUMPTION	:	1.2W
DUTY CYCLE	:	CONTINUOUS
COIL TEMPERATURE INCREASE	:	MAX.47℃ FROM ROOM TEMPERATURE
INSULATION CLASS	:	CLASS B
DIELECTRIC STRENGTH	:	1500VAC FOR 60s

WETTED MATERIALS

PART NO	PART NAME	MATERIAL	REQD.	NOTE
7	O-RING	DAIEL®PERFLUOR	1	
6	DIAPHRAGM	PTFE	2	
5	VALVE BODY A	ETFE	1	
4	RETAINER	DAIEL®PERFLUOR	1	
3	STOPPER	ETFE	2	
2	VALVE BODY B	ETFE	1	
1	SPRING CASE	PVDF	1	

SYM.	DATE	DESCRIPTION
△		
△		
△		

REVISION

SCALE	APPROVED	CHECKED	DRAWN
3/1			
A3			

SOLENOID VALVE
EXAKN-2-NC

DRAWING NO
957010-00-S

TAKASAGO ELECTRIC INC
MIDORIKU. NAGOYA. JAPAN

2006- 3-14